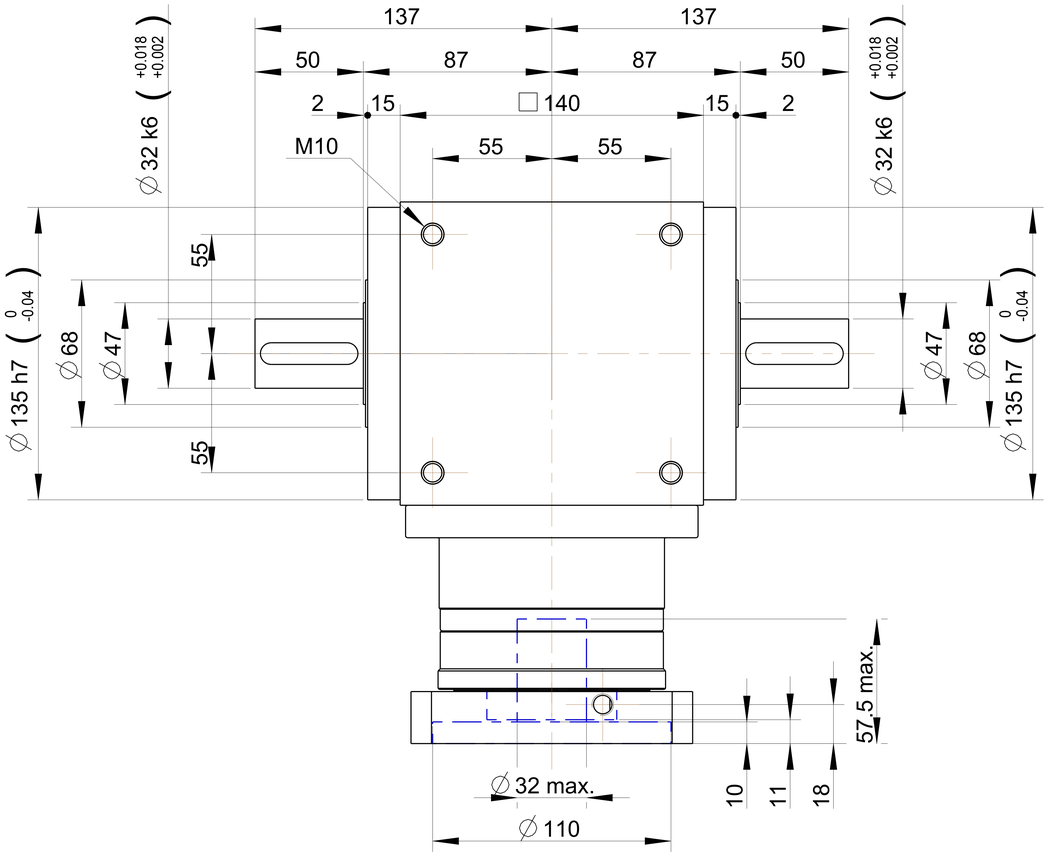

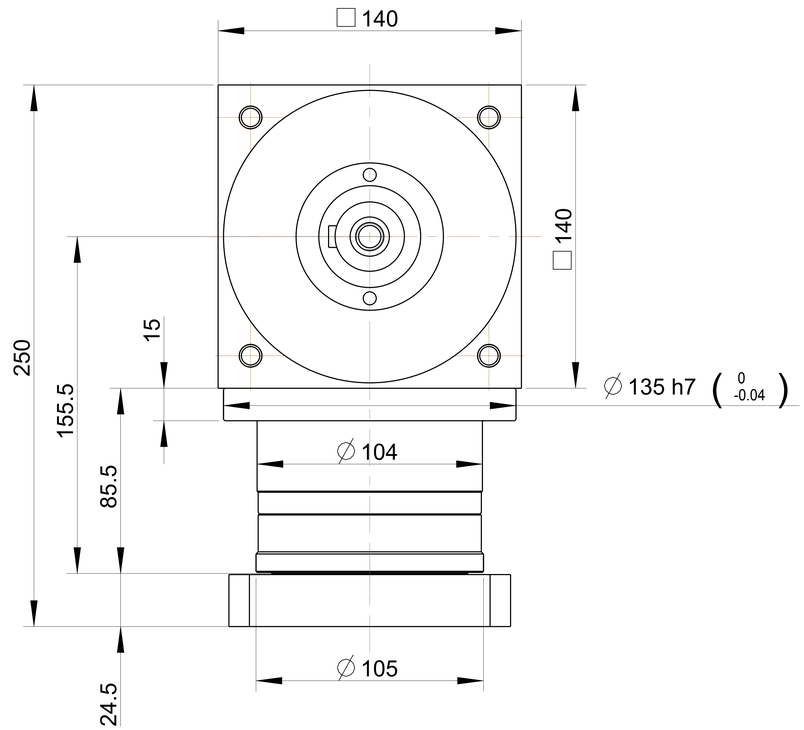

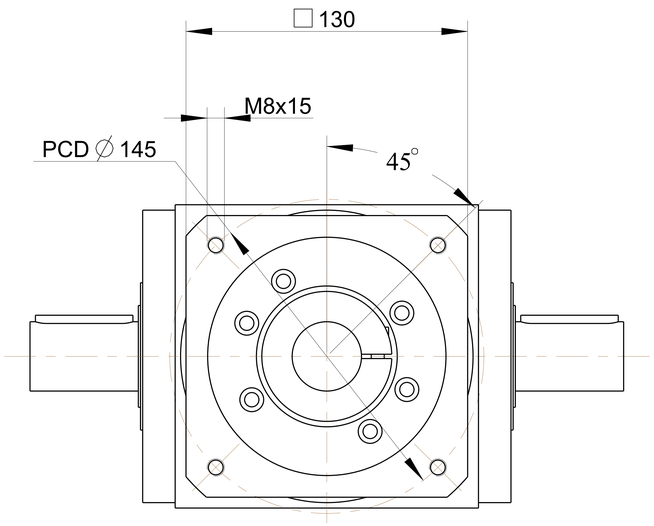

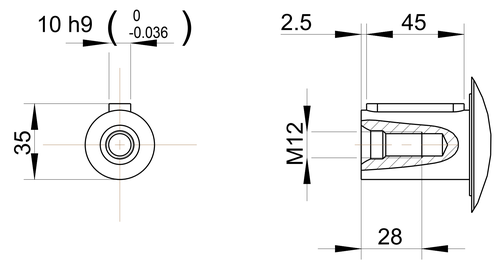

PART NO. ATB140FL1-P0403401402 AD-P110-M130-2		APEX DYNAMICS, INC.
APPROVALS	DATE	TITLE ATB140FL 1 STAGE AND MOTOR FLANGE MOUNTING
DRAWN		DWG NO. ATB140FL1-P0403401402
CHECKED		
APPROVED		SIZE A0 / SCALE 1:1 / REV

ATB140FL-003_S7 / MITSUBISHI HG-SR102