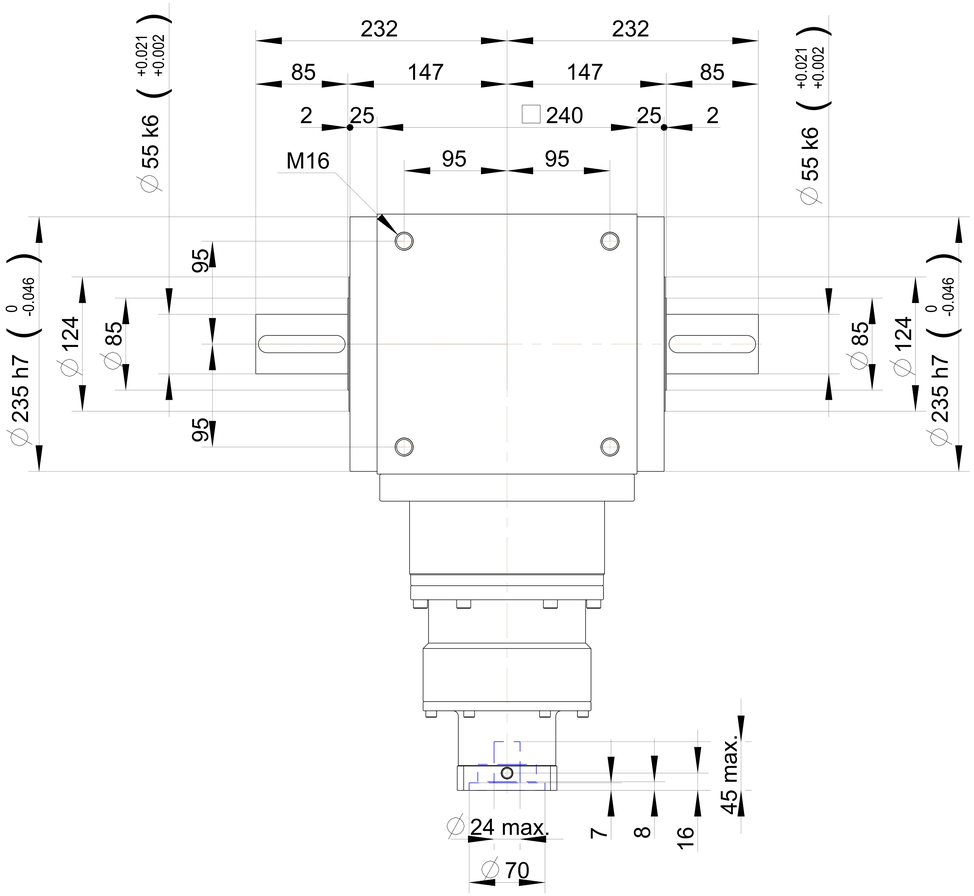


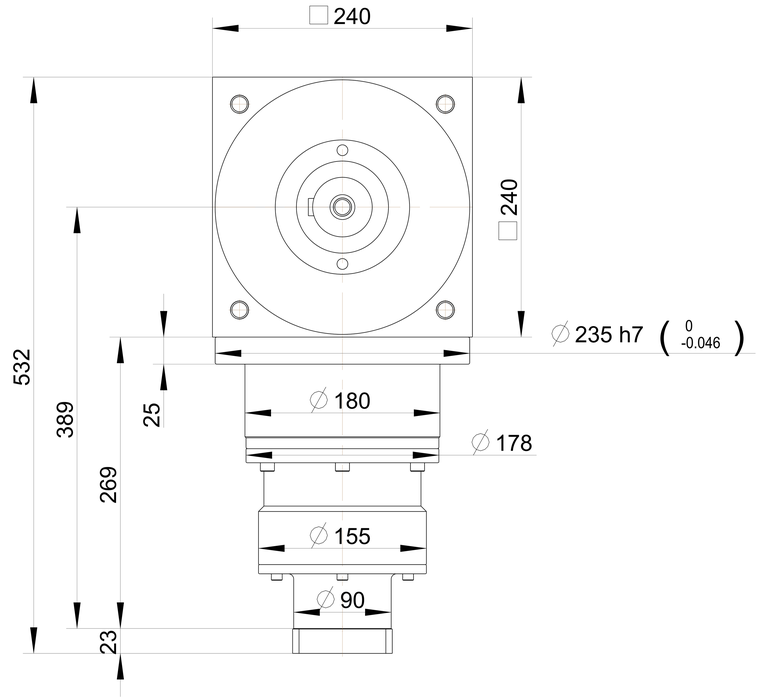


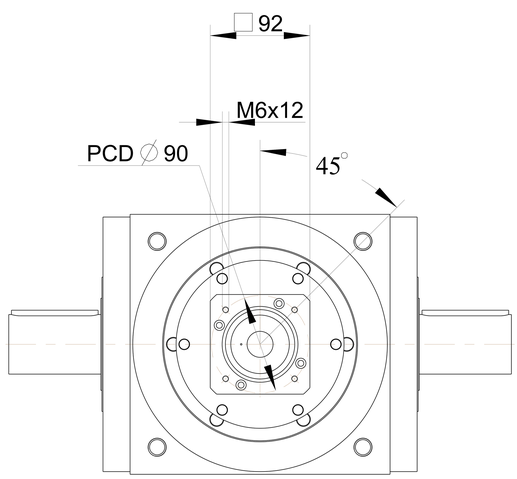


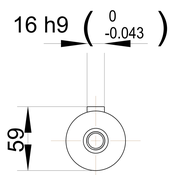


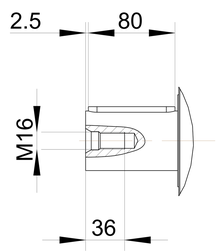


| | | |
|---|---|---|
| PART NO.<br>ATB240FL3-P0405300308<br>AD-PE90-M92-8 | | APEX DYNAMICS, INC. |
| APPROVALS | DATE | TITLE<br>ATB240FL 3 STAGES<br>AND MOTOR FLANGE MOUNTING |
| DRAWN | | |
| CHECKED | | DWG NO.<br>ATB240FL3-P0405300308 |
| APPROVED | | SIZE 3A0 / SCALE 1:1 / REV |