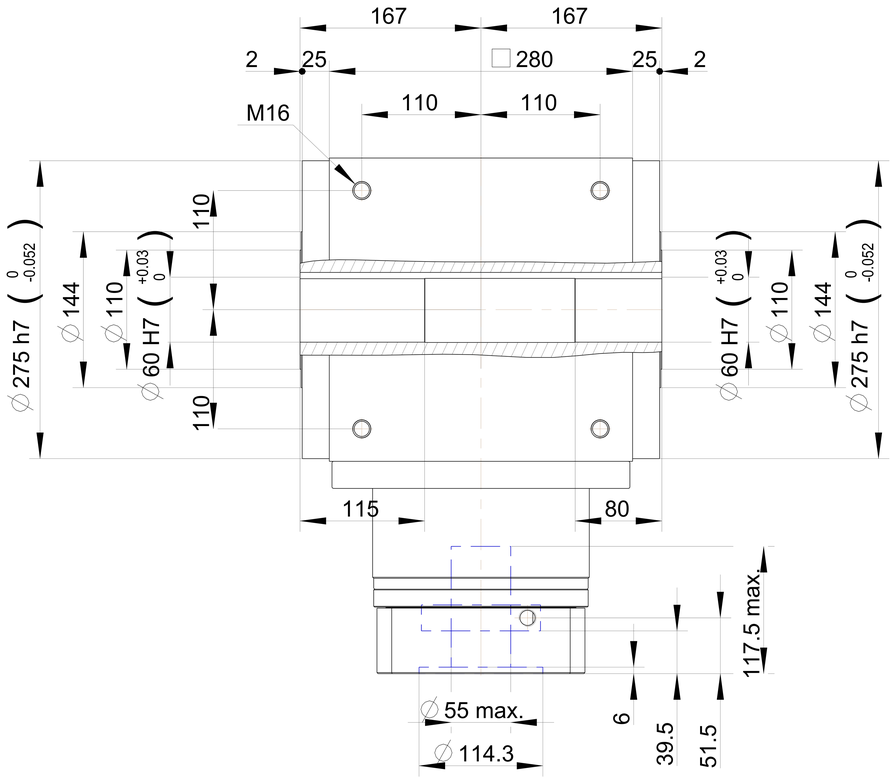

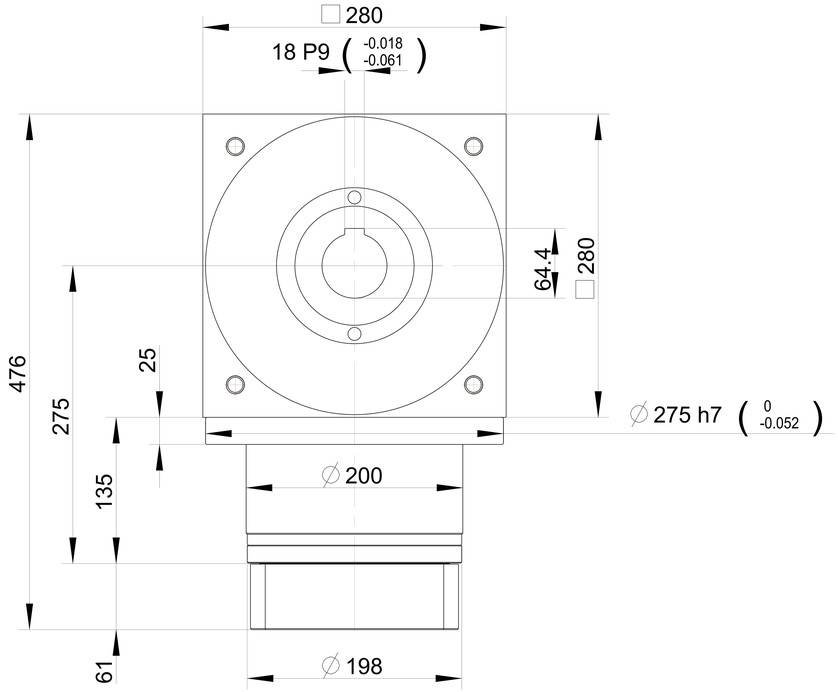

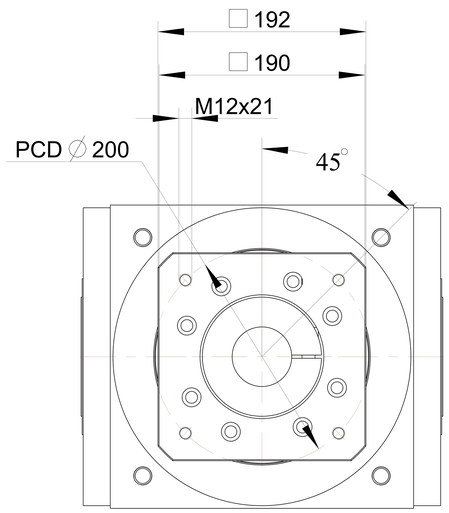

PART NO. ATB280FH1-P0403790008 AD-P255-M190-Y8		APEX DYNAMICS, INC.
APPROVALS	DATE	TITLE ATB280FH 1 STAGE AND MOTOR FLANGE MOUNTING
DRAWN		DWG NO. ATB280FH1-P0403790008
CHECKED		
APPROVED		SIZE 3A0 / SCALE 1:1 / REV