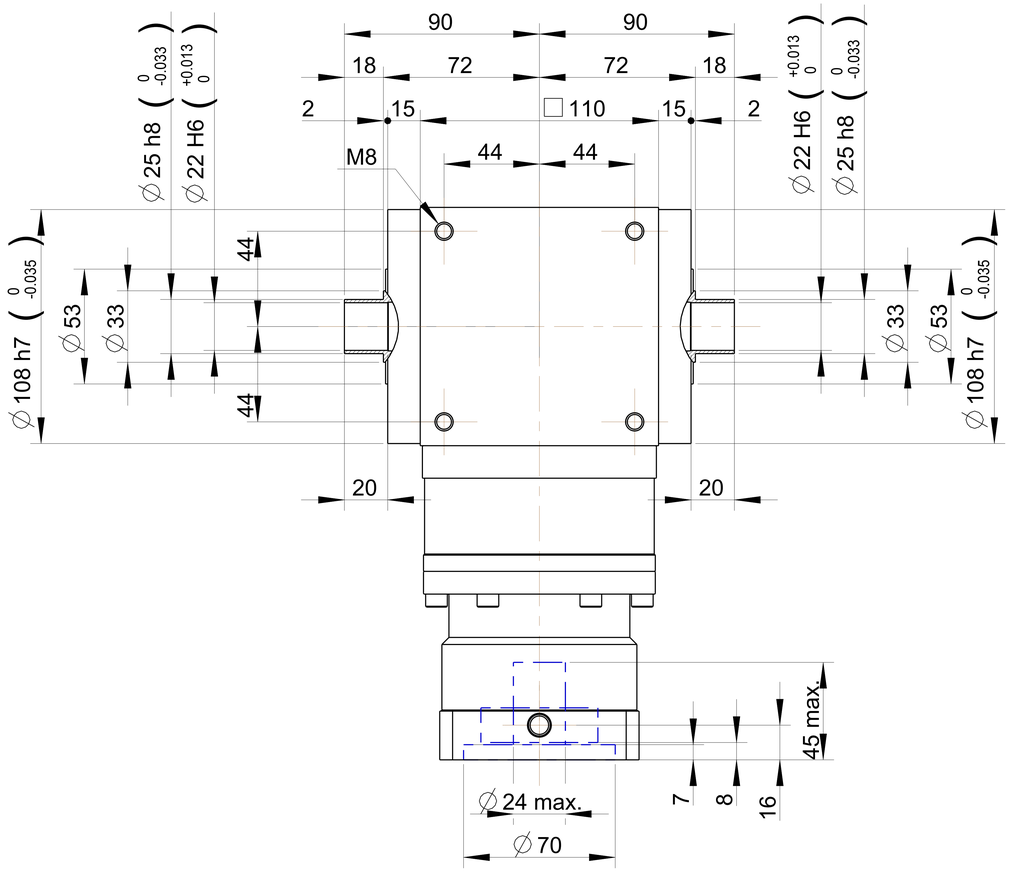

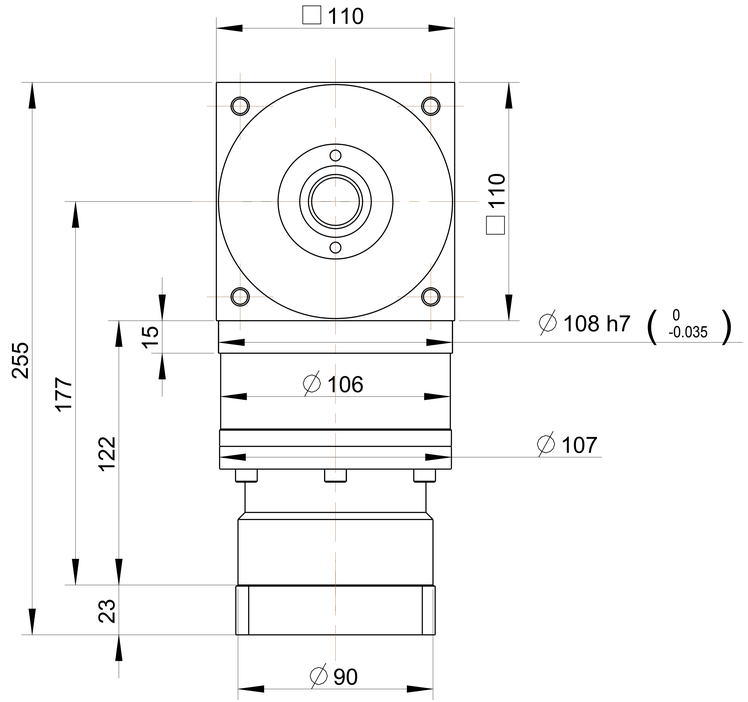

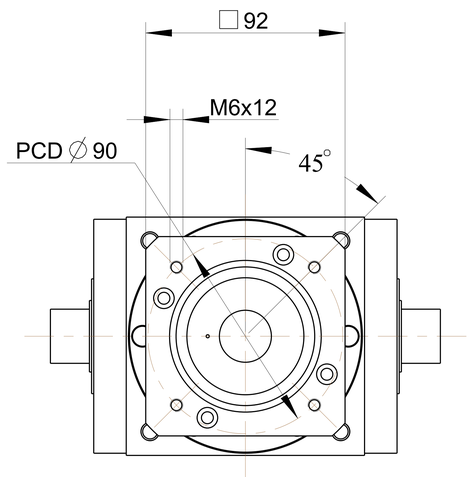

PART NO. ATB110FC2-P0405300308 AD-PE90-M92-8		APEX DYNAMICS, INC.
APPROVALS	DATE	TITLE ATB110FC 2 STAGES AND MOTOR FLANGE MOUNTING
DRAWN		DWG NO. ATB110FC2-P0405300308
CHECKED		
APPROVED		SIZE A0 / SCALE 1:1 / REV

ATB110FC - 007 / MITSUBISHI HG-KR73