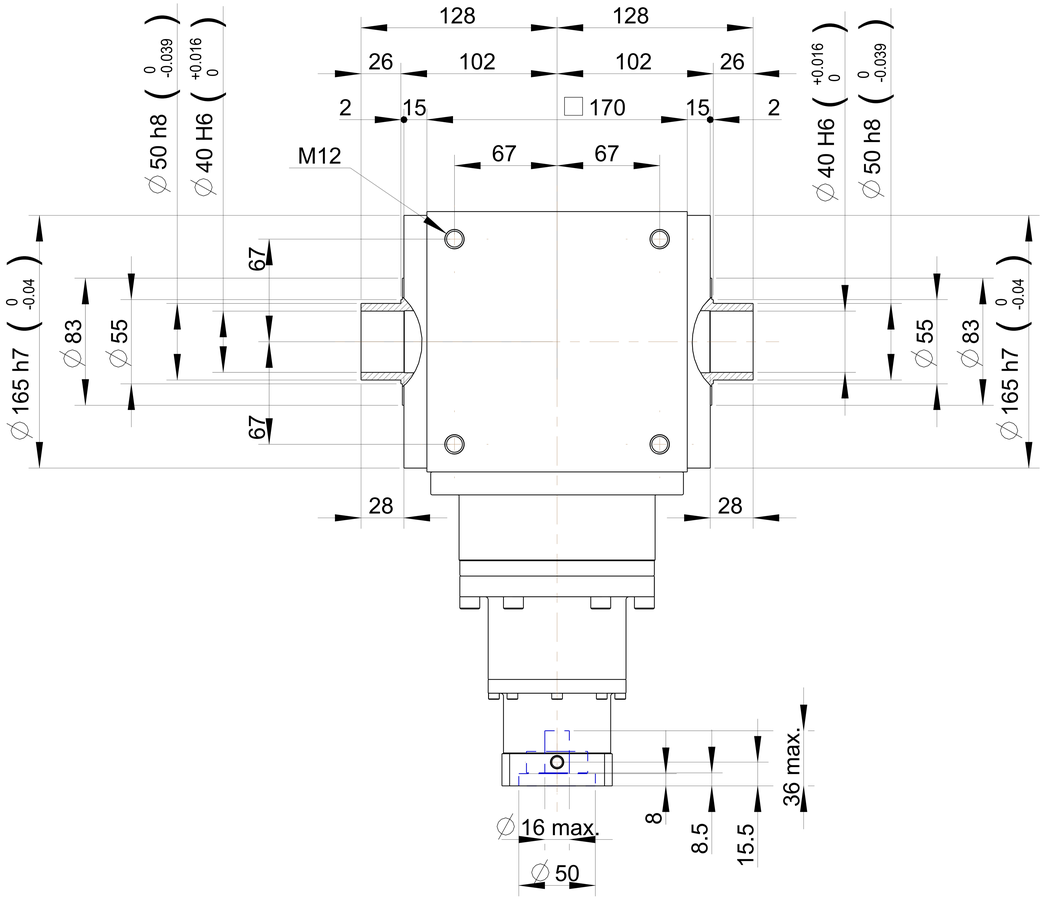

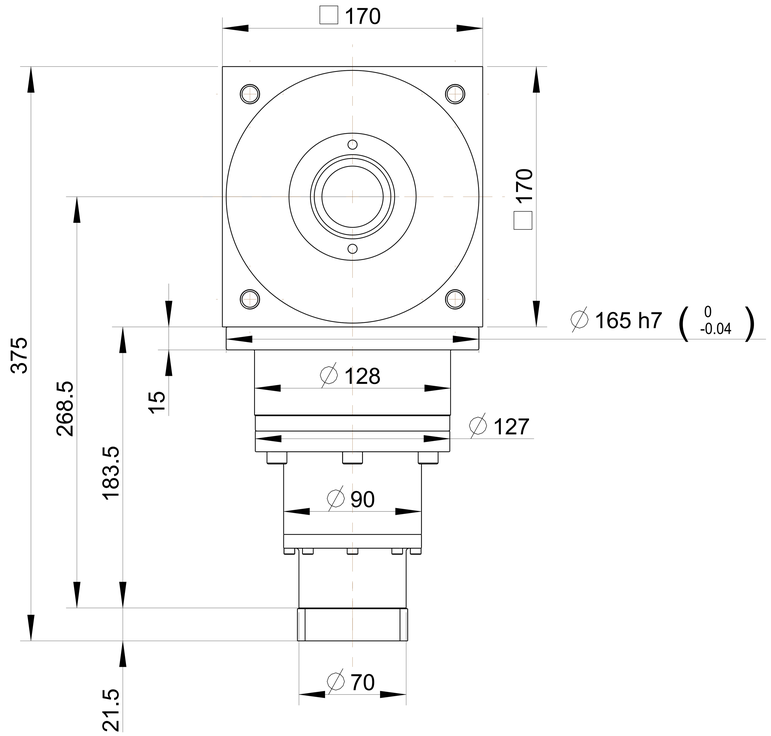

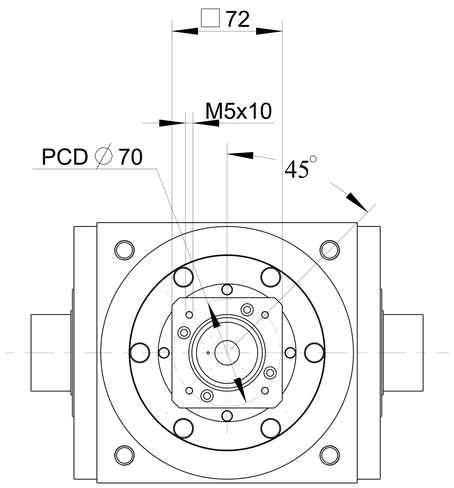

PART NO. ATB170FC3-P0405200512 AD-PE70-M72-12		APEX DYNAMICS, INC.
APPROVALS	DATE	TITLE ATB170FC 3 STAGES AND MOTOR FLANGE MOUNTING
DRAWN		DWG NO. ATB170FC3-P0405200512
CHECKED		
APPROVED		SIZE 2A0 · SCALE 1:1 · REV