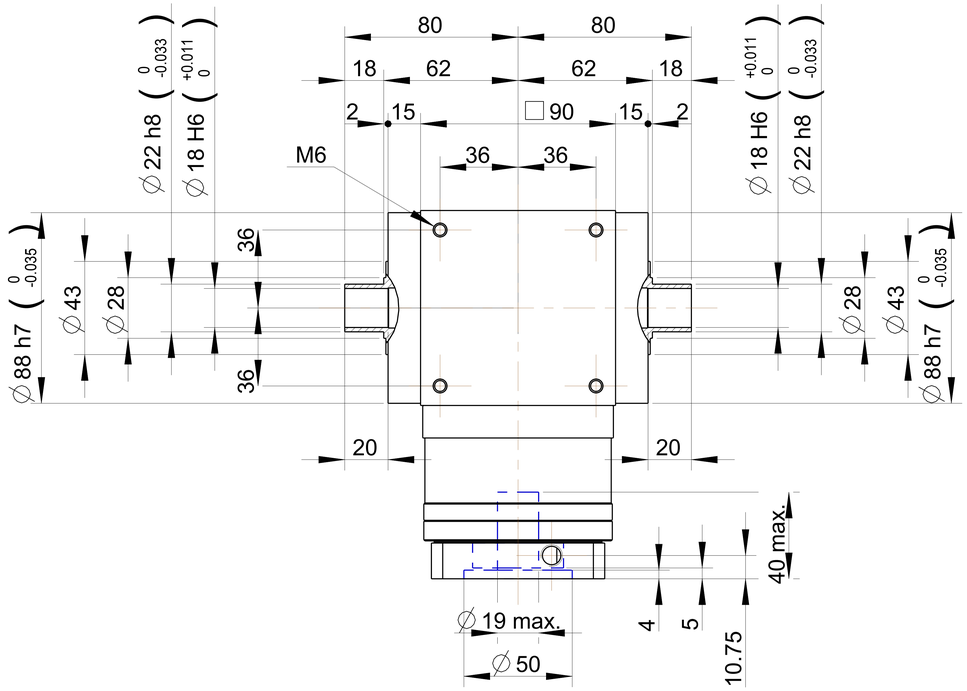


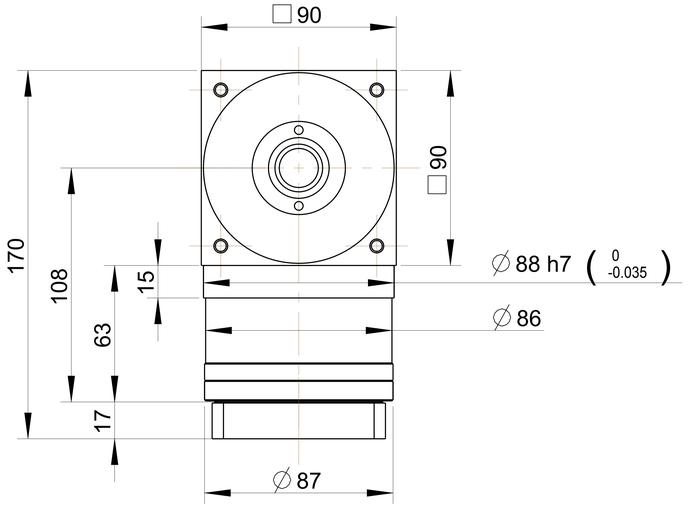


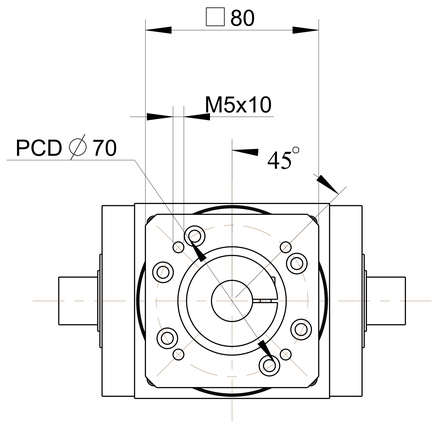


| | | |
|---|---|---|
| PART NO.<br>ATB090FC1-P0403300208<br>AD-P90-M80-8 | | APEX DYNAMICS, INC. |
| APPROVALS | DATE | TITLE<br>ATB090FC 1 STAGE<br>AND MOTOR FLANGE MOUNTING |
| DRAWN | | DWG NO.<br>ATB090FC1-P0403300208 |
| CHECKED | | |
| APPROVED | | SIZE A0 / SCALE 1:1 / REV |

ATB090FC - 004 / MITSUBISHI HG-KR43