REV	DESCRIPTION	APPR	CHCK	DRWN	DATE
△					
△					
△					
△					

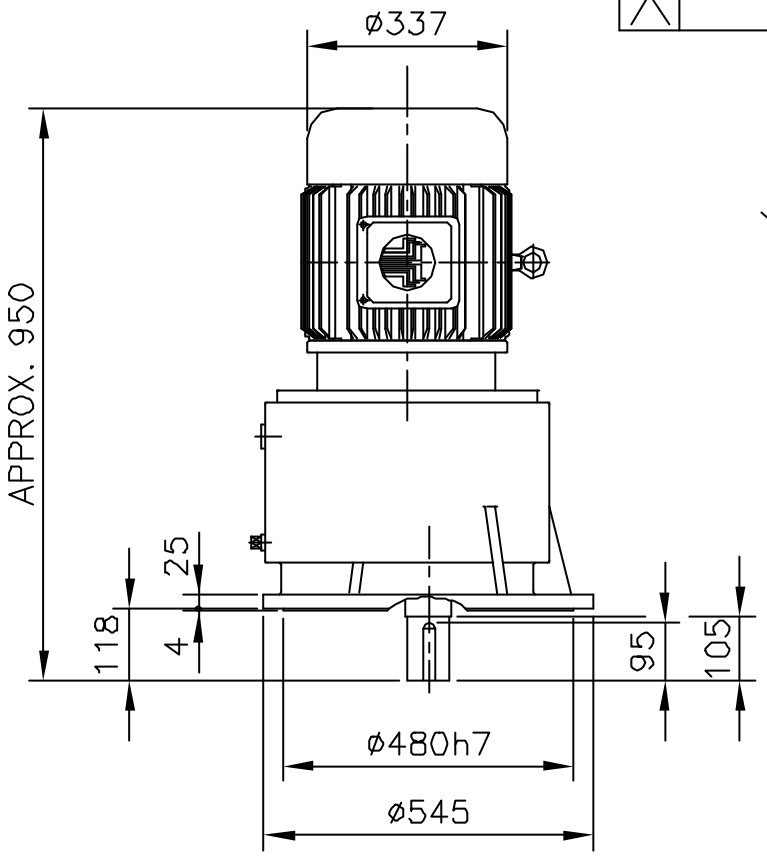

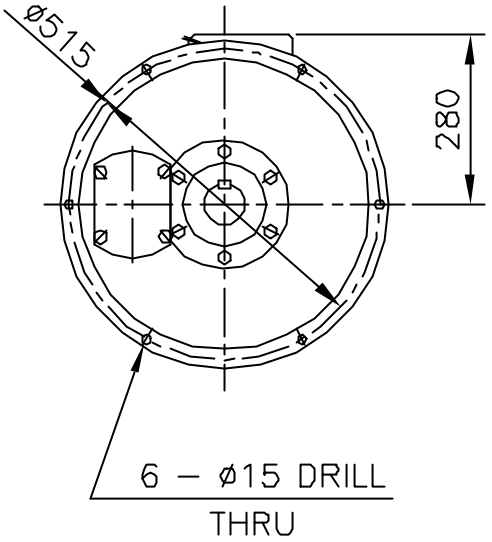

VIEW "Q"

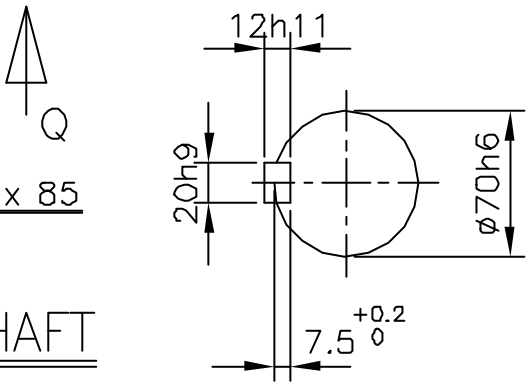

KEY 20 x 12 x 85

OUTPUT SHAFT

OIL SEAL	BEARING 6207ZZ	BEARING 6311ZZ	OIL : ISO VG 220
D(M) 55 x 78 x 12	30209	30309	ABOUT 15 l
D(M) 75 x 100 x 13	30213	32215	WEIGHT 324 kg

TYPE FVB 20HP 4P 25~30				DWG. NAME OUTLINE DIMENSION			
APPROV		CHECK	DESIGN	DRAWN	THIRD ANGLE PROJECTION	SCALE 1/12.5	DATE 1988.9.
김 96.12.26. 동일	정 96.12.26. 영길	문 96.12.24. 병옥	홍 96.12.23. 원철		REF DWG NO.	160L	
HYOSUNG INDUSTRIES CO.,LTD.					DWG NO.	G K E N 1 2 9	