REV	ZONE	DESCRIPTION	DRAWN	APPRVD	DATE

DWG. NO.

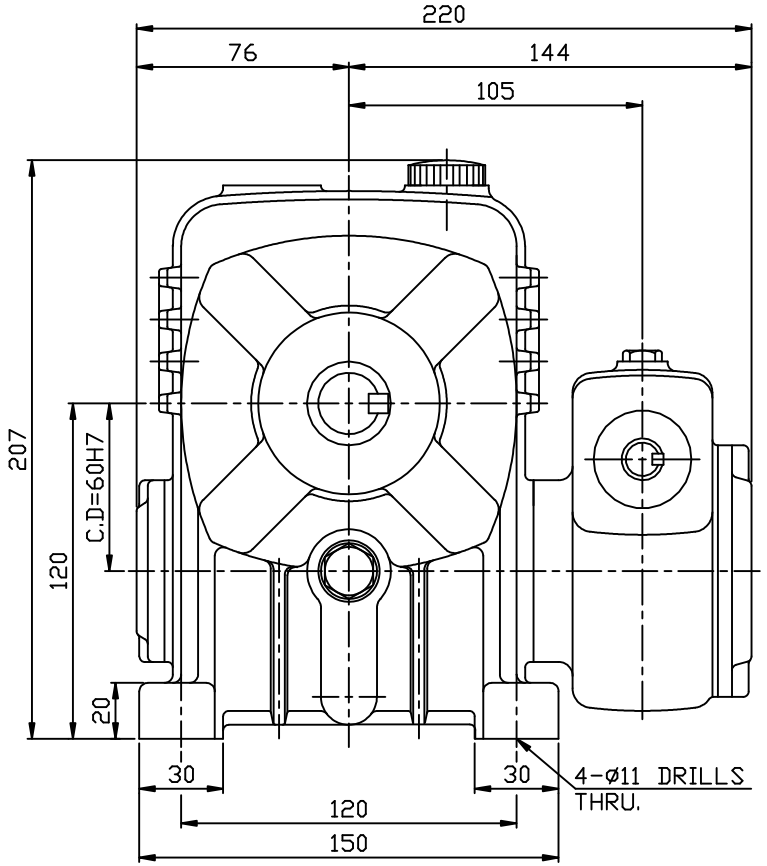

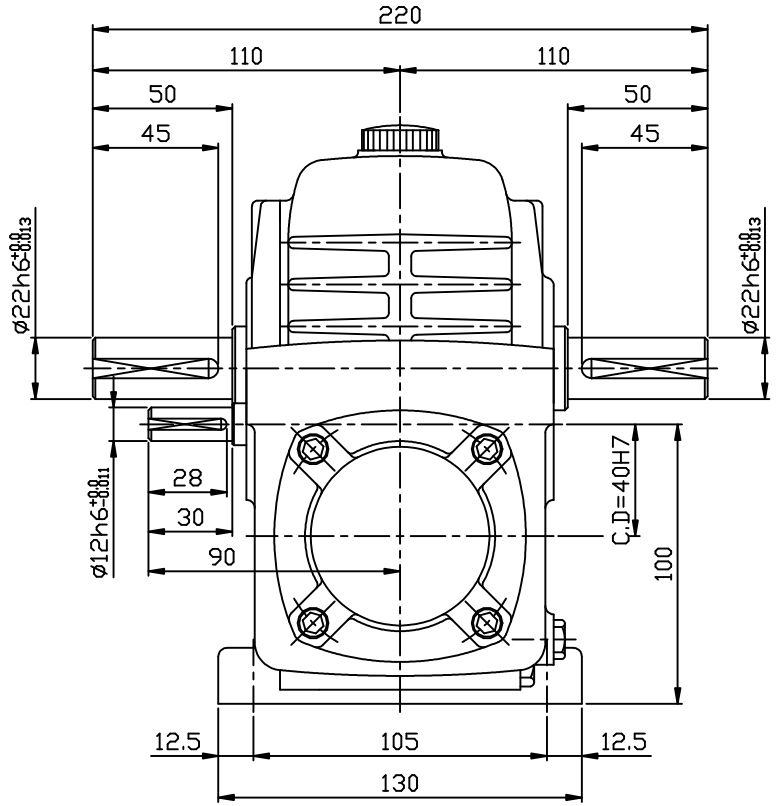

M5*0.8
M6* 1
M8*1.25
M10*1.5
M12*1.75
M16* 2
M18*2.5
M20*2.5
M22*2.5
M24*3

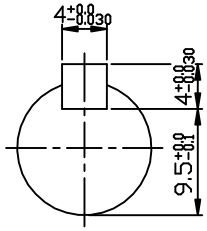

INPUT SHAFT

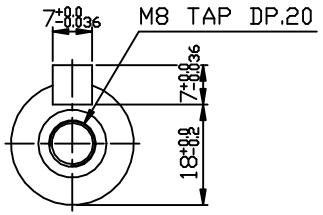

OUTPUT SHAFT

NO	PART NO.	DESCRIPTION	Q'TY	MATERIAL

	DATE	NAME	SCALE	TITLE	SHEET
DESIGN			1/2	OUTLINE DWG.	1/1
CHECK				MAX21 WORM REDUCER DWB60 i=1/200~1/900 F-TYPE	
APPROV					
SAMYANG REDUCTION GEARS CO., LTD			DWG SIZE A3	DWG. NO. DWB60_f	REV