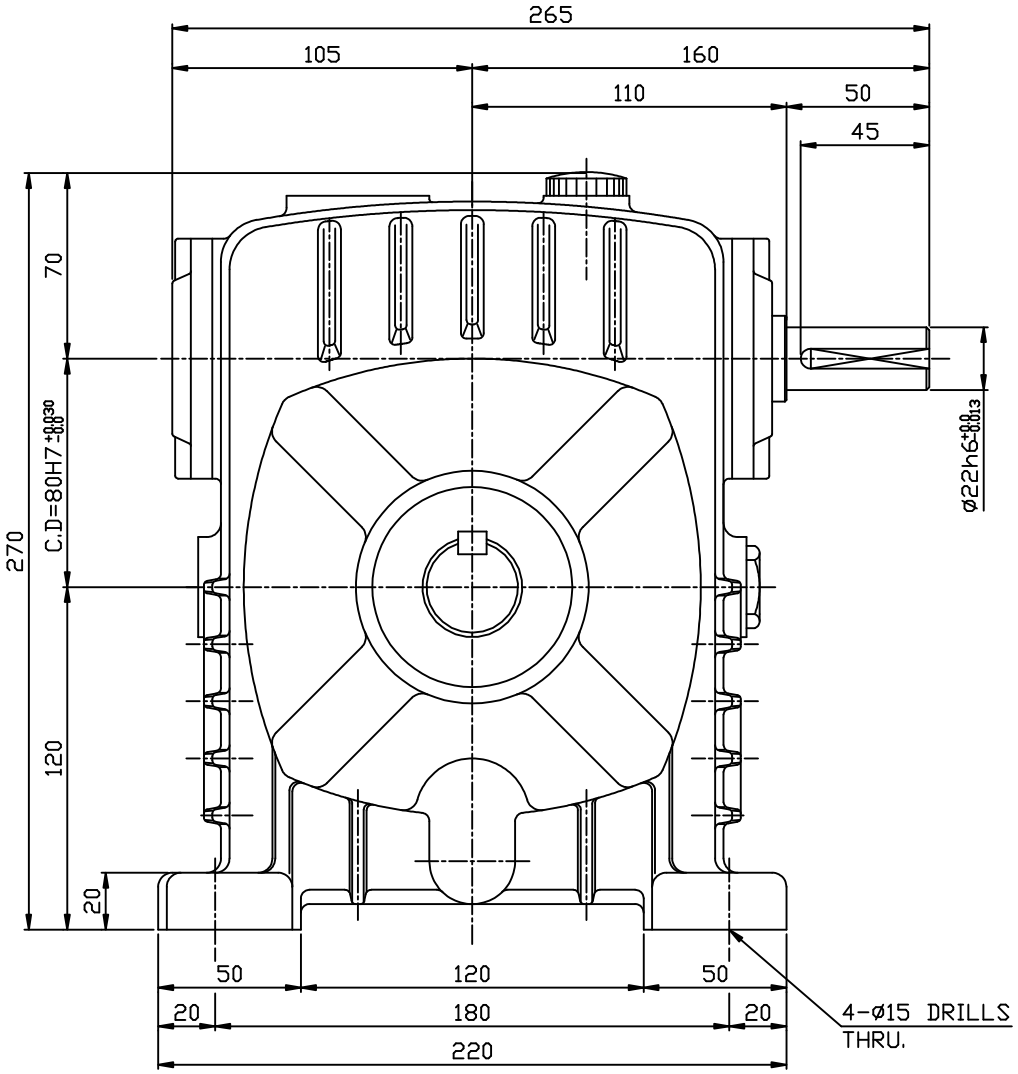

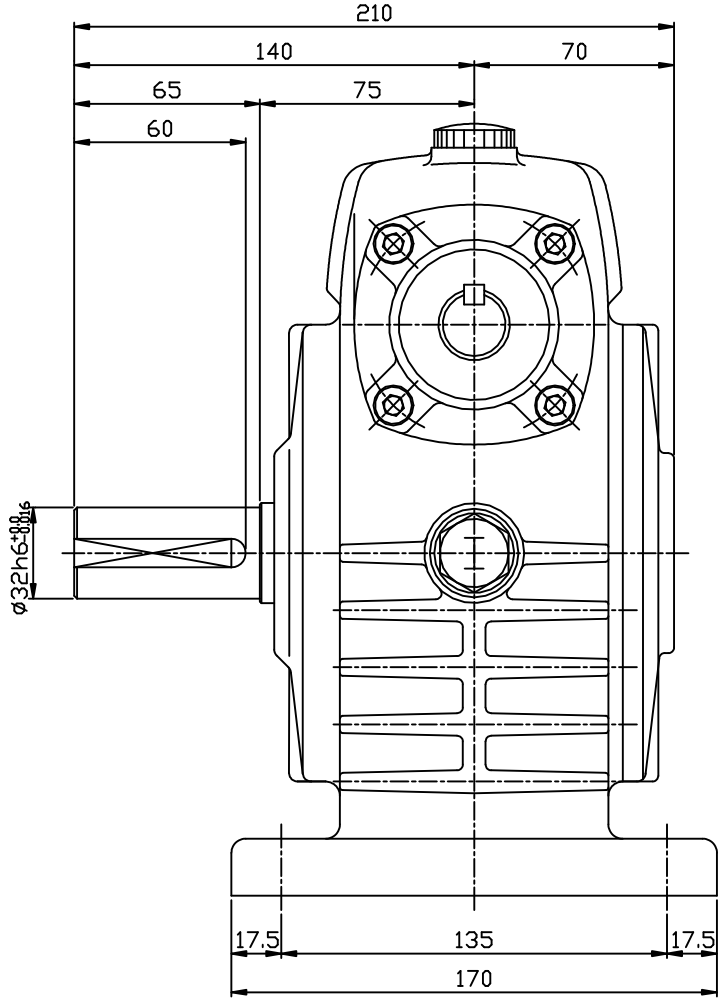

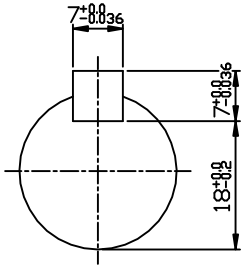

INPUT SHAFT

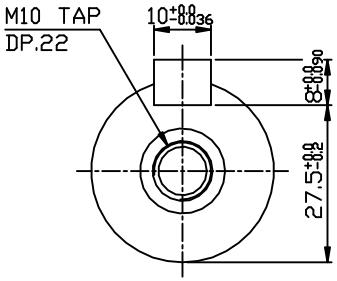

OUTPUT SHAFT

	DATE	NAME
DESIGN	1999.4.15	D.W,SA
CHECK		
APPROV	1999.4.15	M.C,HUR

SAMYANG
REDUCTION GEAR CO., LTD.

TITLE OUTLINE DWG.
MAX21 WORM REDUCER WU80
i=1/10~1/60 B-TYPE

WU80_B

SCALE 1/1

SHEET /

M5=0.8
M6= 1
M8=1.25
M10=1.5
M12=1.75
M16= 2
M18=2.5
M20=2.5
M22=2.5
M24=3